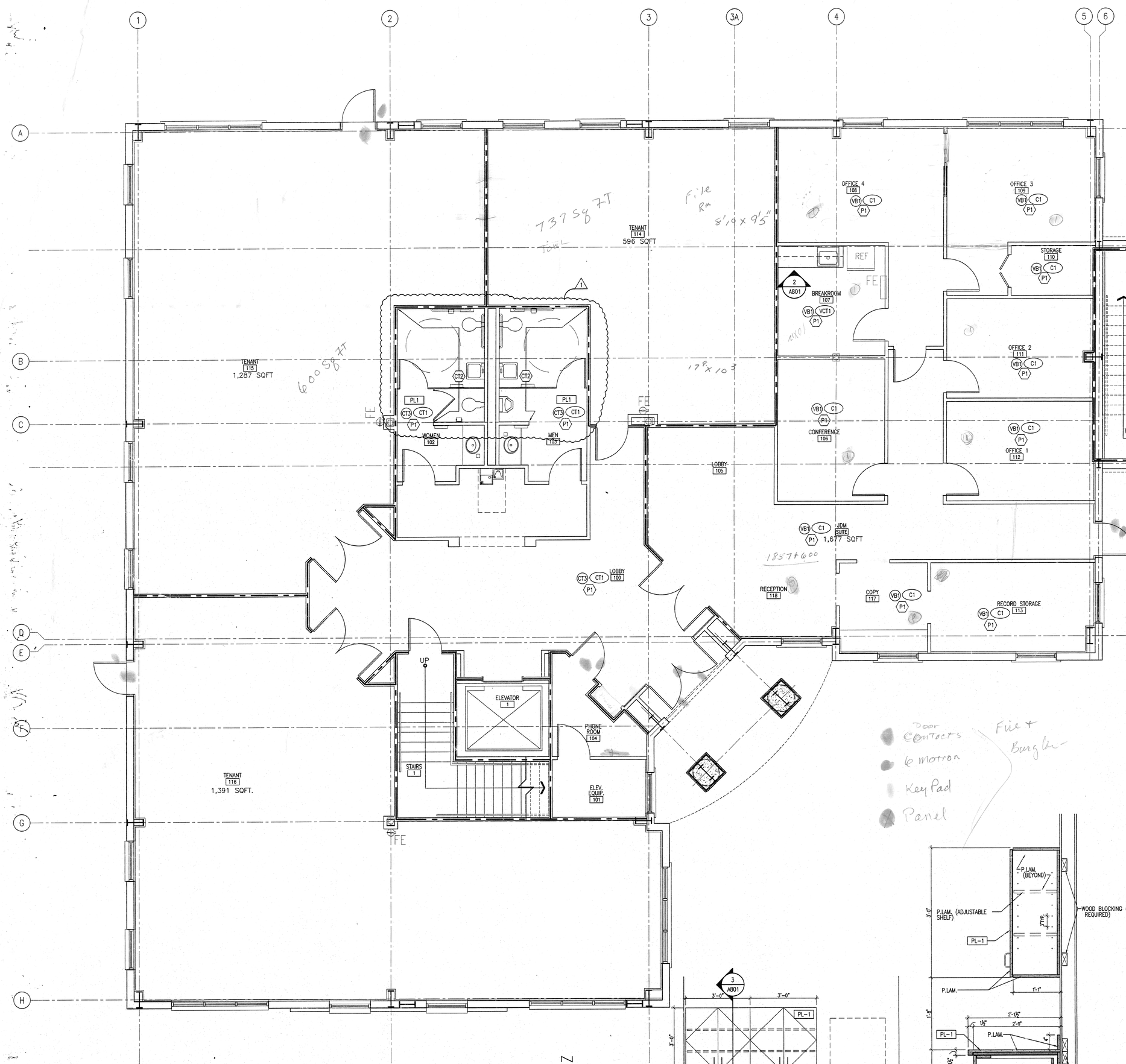

1 A801 **FIRST FLOOR PLAN**
SCALE: 1/4"=1'-0"

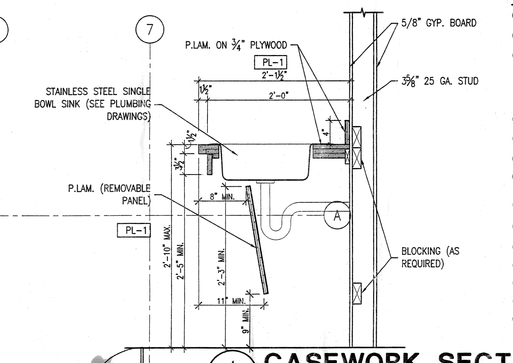

4 A801 **CASEWORK SECTION**
SCALE: 1" = 1'-0"

PLAN NOTES

1. ALIGN FINISH FACES.
2. HI-LO DRINKING FOUNTAIN, SEE PLUMBING DRAWINGS
3. JANITORS SINK. DRYWALL CONTRACTOR TO PROVIDE FIBERGLASS REINFORCED PLASTIC PANEL FROM TOP OF SINK TO BOTTOM OF FAUCET ON BOTH WALLS ADJACENT TO THE SINK. PROVIDE 30" LONG FLEXIBLE HOSE AND HOSE CLAMP. SEE PLUMBING DRAWINGS FOR ADDITIONAL INFORMATION.
4. LINE OF WALLS BELOW
5. METAL COLUMN W/ METAL COVER SYSTEM
6. WALL MOUNTED FIRE EXTINGUISHER.
7. SEMI-RECESSED FIRE EXTINGUISHER CABINET AND FIRE EXTINGUISHER. MOUNT TOP OF CABINET AT +54" A.F.F.
8. COPIER LOCATION – VERIFY ELECTRICAL REQUIREMENTS WITH TENANT
10. LOCATION OF RECESSED FIRE DEPARTMENT KEY LOCK BOX AT 8'-0" A.F.F.
12. REFRIGERATOR LOCATION – VERIFY ELECTRICAL REQUIREMENTS WITH TENANT
13. ELECTRICAL METER CENTER LOCATION – SEE ELECTICAL DRAWINGS
14. WATER HEATER – SEE PLUMBING DRAWINGS.
15. 26 GAUGE, HIGH FLOATING MECHANICALLY SEAMED METAL ROOF
16. 4C HORIZONTAL MAIL BOX MB-4 MB1 DOORS/1PL5-SINGLE COLUMN-FRONT LOADING-USPS ACCESS SIZE 16.375"W X 41"H X17" D

ABBREVIATION

A.A.C.	AERATED AUTOCLAVED CONCRETE	LB.	POUND
A.F.F.	ABOVE FINISH FLOOR		
AL.	ALUMINUM	MAX.	MAXIMUM
ALT.	ALTERNATIVE	MFG.	MANUFACTURER
		MIN.	MINIMUM
B.H.	BULKHEAD	MIR.	MIRROR
B.O.	BOTTOM OF	M.O.	MASONRY OPENING
BOT.	BOTTOM	MTL.	METAL
BRG.	BEARING		
		O.C.	ON CENTER
CLA	CLEAR ANODIZED	O.D.	OUTSIDE DIAMETER
CLG.	CEILING	O.I.S.	OPENING IN SLAB
CW.	CURTAIN WALL	OPP.	OPPOSITE
C.J.	CONTROL JOINT		
		P.J.	PANEL JOINT
DIA.	DIAMETER	PF.	PREFINISHED
DTL.	DETAIL	PL.	PANEL
DN.	DOWN	PR.	PAIR
DWGS.	DRAWINGS	PT.	PAINTED
EA.	EACH	R.O.	ROUGH OPENING
ELEV.	ELEVATION		
E.O.S.	EDGE OF SLAB	S.F.	SQUARE FEET
EQ.	EQUAL	STRUCT.	STRUCTURE
		STL.	STEEL
FIN.	FINISH		
FL.	FLOOR	T.F.	INCLUDED IN TENANT FINISH
FT.	FEET		
F.O.	FINISH OPENING	T.O.	TOP OF
GALV.	GALVANIZED	TYP.	TYPICAL
HC.	HANDICAP	U.N.O.	UNLESS NOTED OTHERWISE
H.M.	HOLLOW METAL		
HR.	HOUR	V.I.F.	VERIFY IN FIELD
		W.C.	WATER CLOSET
ID.	INSIDE DIAMETER	W.C.'S	WATER CLOSETS
IN.	INCH	W/	WITH
		WD.	WOOD
K.O.	KNOCKOUT	W.S.	WATER SOFTENER

FINISH SPECIFICATIONS:

(XXX) INDICATES FLOOR FINISH

FLOOR TILE
CT1 — MFG: TBD; STYLE: TBD; SIZE: TBD; COLOR: TBD; FINISH: TBD

VINYL COMPOSITE TILE
VCT1 — MFG: TBD; PATTERN: TBD; COLOR: TBD

WALK-OFF MAT
WM1 — MFG: TBD; PATTERN: TBD; COLOR: TBD

CARPET
C1 — MFG: TBD; PATTERN: TBD; COLOR: TBD; TYPE: TBD

GROUT
GT1 — MFG: TBD; COLOR: TBD; SIZE: 3/8"

SEALED CONCRETE
SC1 — MFG: TBD; COLOR: TBD; SIZE: TBD

(XX) INDICATES WALL FINISH

CERAMIC TILE
CT2 — MFG: TBD; STYLE: TBD; SIZE: 12" X 12"; COLOR: TBD; FINISH: TBD; LOCATION: TO 4'-0" A.F.F. MIN.

PAINT
P1 — MFG: TBD; COLOR: TBD; FINISH: TBD

(XX) INDICATES BASE FINISH

VINYL BASE
VB1 — MFG: TBD; COLOR: TBD; SIZE: TBD

TILE BASE
CT3 — MFG: TBD; COLOR: TBD; SIZE: 6" MIN.; STYLE: TBD; FINISH: TBD

(XXX) INDICATES MISCELLANEOUS FINISH

PLASTIC LAMINATE
PL1 — MFG: TBD; COLOR: TBD; FINISH: TBD

WALL TYPES

NOTES: 1 – SEE REFLECTED CEILING PLANS FOR CONSTRUCTED WALL HEIGHT
2 – PROVIDE MOISTURE RESISTANT GYPSUM WALLBOARD ON ALL WET AREA WALLS

INDICATES 1-HOUR FIRE RATED WALL

W1	3-5/8" 25 GAUGE METAL STUDS @ 24"O.C. WITH 5/8" GYPSUM WALL BOARD EACH SIDE.	
W2	3-5/8" 25 GAUGE METAL STUDS @24"O.C. WITH (1) LAYER 5/8" GYPSUM WALL BOARD EACH SIDE AND (1) LAYER SOUND ATTENUATION BLANKETS EACH STUD CAVITY.	1HR RATED UL-U465
W3	3-5/8" 25 GAUGE METAL STUDS @24"O.C. WITH 5/8" GYPSUM WALL BOARD ONE SIDE.	
W4	3-5/8" 25 GAUGE METAL STUDS @24"O.C. WITH 5/8" GYPSUM WALL BOARD ONE SIDE AND (1) LAYER SOUND ATTENUATION BLANKETS EACH STUD CAVITY.	
W5	3-5/8" 25 GAUGE METAL STUDS @24"O.C. WITH (1) LAYER 5/8" GYPSUM WALL BOARD EACH SIDE AND (1) LAYER SOUND ATTENUATION BLANKETS EACH STUD CAVITY.	
W6	6" 25 GAUGE METAL STUDS @24"O.C. WITH (1) LAYER 5/8" GYPSUM WALL BOARD INTERIOR SIDE AND (1) LAYER 5/8" PLYWOOD EXTERIOR SIDE W/ LAYER SOUND ATTENUATION BLANKETS EACH STUD CAVITY.	
W7	2 1/2" 22 GAUGE "C-H" METAL STUDS @24"O.C. WITH 1" GYPSUM LINER PANEL ONE SIDE AND (1) LAYER 5/8" GYPSUM WALL BOARD ONE SIDE AND (1) LAYER SOUND ATTENUATION BLANKETS EACH STUD CAVITY.	1HR RATED UL-U415
W8	4" 22 GAUGE "C-H" METAL STUDS @24"O.C. WITH 1" GYPSUM LINER PANEL ONE SIDE AND (1) LAYER 5/8" GYPSUM WALL BOARD ONE SIDE AND (1) LAYER SOUND ATTENUATION BLANKETS EACH STUD CAVITY.	1HR RATED UL-U415

REVIEWED
JAN 30 2008
SEMINOLE COUNTY ENGINEERING

GENERAL NOTES:

A. ALL DIMENSIONS ARE FROM FACE OF STUD, OR FACE OF PREGAST CONCRETE PANEL. ANY DIMENSIONS NOT SHOWN OR DEEMED QUESTIONABLE ARE TO BE VERIFIED BY ARCHITECT/DESIGNER. DO NOT SCALE DRAWINGS.
B. PROVIDE WOOD FIRE TREATED BLOCKING SUPPORTS AS REQUIRED FOR ALL SURFACE MOUNTED ITEMS.
C. COORDINATE WORK OF THIS TRADE WITH OTHER TRADES.
D. DOOR AND FRAME NUMBERS CORRESPOND TO ROOM NUMBERS. WHERE MORE THAN ONE DOOR OCCURS IN A ROOM, A SUFFIX HAS BEEN ADDED (I.E. 100A). SEE DIVISION 500 DRAWINGS FOR DOOR SCHEDULE.
E. PROVIDE MISCELLANEOUS METAL SUPPORT FOR ALL CEILING SUSPENDED ITEMS.
F. APPLY SEALANT AT ALL JUNCTURES BETWEEN DIFFERENT MATERIALS (I.E. STOREFRONT AND PRECAST CONCRETE PANEL).
G. APPLY SEALANT AT ALL PLUMBING FIXTURES AT JUNCTURE WITH WALL.
H. APPLY SEALANT AT ALL COUNTERTOPS AND BACK SPLASHES AT JUNCTURE WITH WALL.
I. ALL STEEL STUDS ARE TO BE BRACED ACCORDING TO MANUFACTURER'S LIMITING HEIGHT L/240.
J. SEE DIVISION 800 DRAWINGS FOR FINISH PLANS AND SPECIFICATIONS.
K. ALL INTERIOR WALLS SHALL BE MARKED IN PLACE PRIOR TO FRAMING FOR ARCHITECT/DESIGNER TO REVIEW.
L. ALL DOORS MUST BE INSTALLED WITH AT LEAST THE MINIMUM MANEUVERING CLEARANCE AT THE DOOR APPROACH PER THE MOST CURRENT AMERICANS WITH DISABILITIES ACT.
M. COLUMN WRAPS ARE TO BE WALL TYPE "W3" TYP. AND ARE TO EXTEND TO 6" ABOVE FUTURE CEILING UNLESS NOTED OTHERWISE.
N. UNDERSIDE OF ALL SHAFTS TO RECEIVE "W7" WALL TYPE HUNG HORIZONTAL IN OPENING IN LOWEST FLOOR PENETRATER.
O. PROVIDE AND INSTALL WALL MOUNTED FIRE EXTINGUISERS IN TENANT AREAS AT A RATE OF 1 PER 3000 SF.
P. DO NOT TAPE OR FINISH GYPSUM WALL BOARD ON EXTERIOR WALLS IN FUTURE TENANT SPACES.
Q. CONTRACTOR/SUPPLIER OF 05400 SERIES STEEL STUDS SHALL BE RESPONSIBLE FOR ENGINEERING OF SUCH. SIZES SHOWN ON DRAWINGS ARE APPROXIMATE.

McKee CONSTRUCTION CO. GENERAL CONTRACTORS

C4 architecture
4700 Millenia Blvd., Suite 390
Orlando, Florida 32839
TEL: 407.363.6138
FAX: 407.363.6131
AA26001067
IA26001067

Revisions: 1 PERMIT REVISION – 11-30-07

Scale: AS NOTED
Date: 08-07-2007
Drawn By: MAI
Checked By: CMG

JDM DEVELOPMENT
ALOMA AVE.
ORLANDO, FLORIDA 32792
1ST FLOOR FINISH PLAN

Certified By:
JAN 21 2008

Drawing Number: A801
Of Sheets

Contractor Job Number: 0000

A/E Job Number: 07002

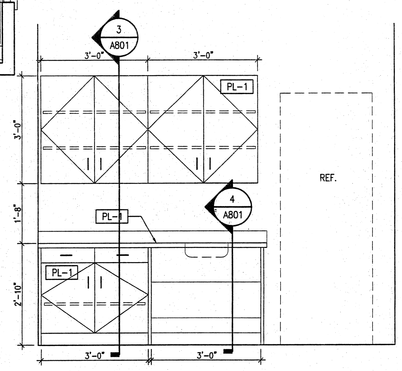

2 A801 **CASEWORK ELEVATION**
SCALE: 1/2" = 1'-0"

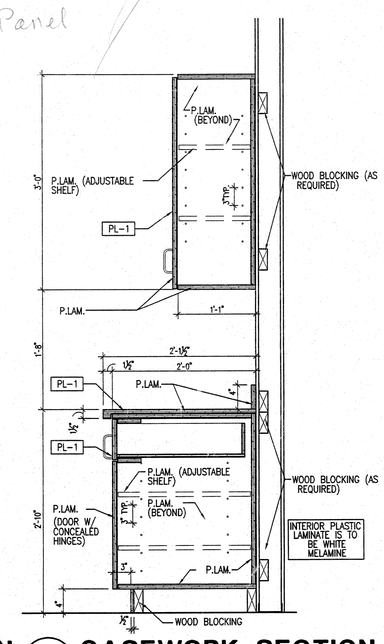

3 A801 **CASEWORK SECTION**
SCALE: 1"=1'-0"

GENERAL FINISH NOTES:

(XXX) INDICATES FLOOR FINISH — (XX) INDICATES WALL FINISH
(XX) INDICATES BASE FINISH — [XXX] INDICATES MISCELLANEOUS FINISH

A. PROVIDE SAMPLES OF ALL FINISHES TO ARCHITECT/DESIGNER FOR REVIEW INCLUDING INSTALLATION JOINT AND SEAM LAY-OUTS.
B. REFERENCE INTERIOR ELEVATIONS, WHERE PROVIDED, FOR ADDITIONAL FINISH INFORMATION.
C. PAINT ALL EXPOSED METAL SURFACES (ie. GRILLES, HEATERS, AND FIRE EXTINGUISHER CABINETS) TO MATCH ADJACENT SURFACE.
D. ALL BULKHEADS ARE TO BE PAINTED P1, UNLESS NOTED OTHERWISE ON REFLECTED CEILING PLANS.
E. PAINT ALL EXPOSED PLYWOOD BACKING BEHIND PHONE AND ELECTRICAL PANELS TO MATCH ADJACENT SURFACE.
F. ZINC STRIPS ARE REQUIRED AT ALL GROUT COLOR CHANGES IN TILE FLOORING AND AT TRANSITIONS FROM TILE FLOORING TO CARPET.
G. ALL FLOORING TILE TO BE THIN SET.
H. GROUT COLOR TO BE SELECTED BY ARCHITECT/DESIGNER.
I. ALL FLOORING TRANSITIONS ARE TO BE EASED USING LATEX TO ACHIEVE A SMOOTH AND UNIFORM TRANSITION.
J. TRANSITION STRIPS BETWEEN UNLIKE FLOORING SURFACES IS TO BE MANUFACTURERS STANDARD THIN PROFILE VINYL MOLDING, COLOR SELECTED BY ARCHITECT/DESIGNER.
K. PROVIDE WINDOW BLINDS AT ALL EXTERIOR WINDOWS, EXCEPT WINDOWS IN THE LOBBY AND VESTIBULE.
L. ELECTRICAL DEVICES COLOR TO MATCH BUILDING STANDARD.
M. ALL FINISHES TO MEET CLASS B OR BETTER FOR FLAME SPREAD PER FBC TABLE 803.5.

McKee CONSTRUCTION CO. GENERAL CONTRACTOR
DATE RECEIVED

Permit Set
Date: 8/1/08