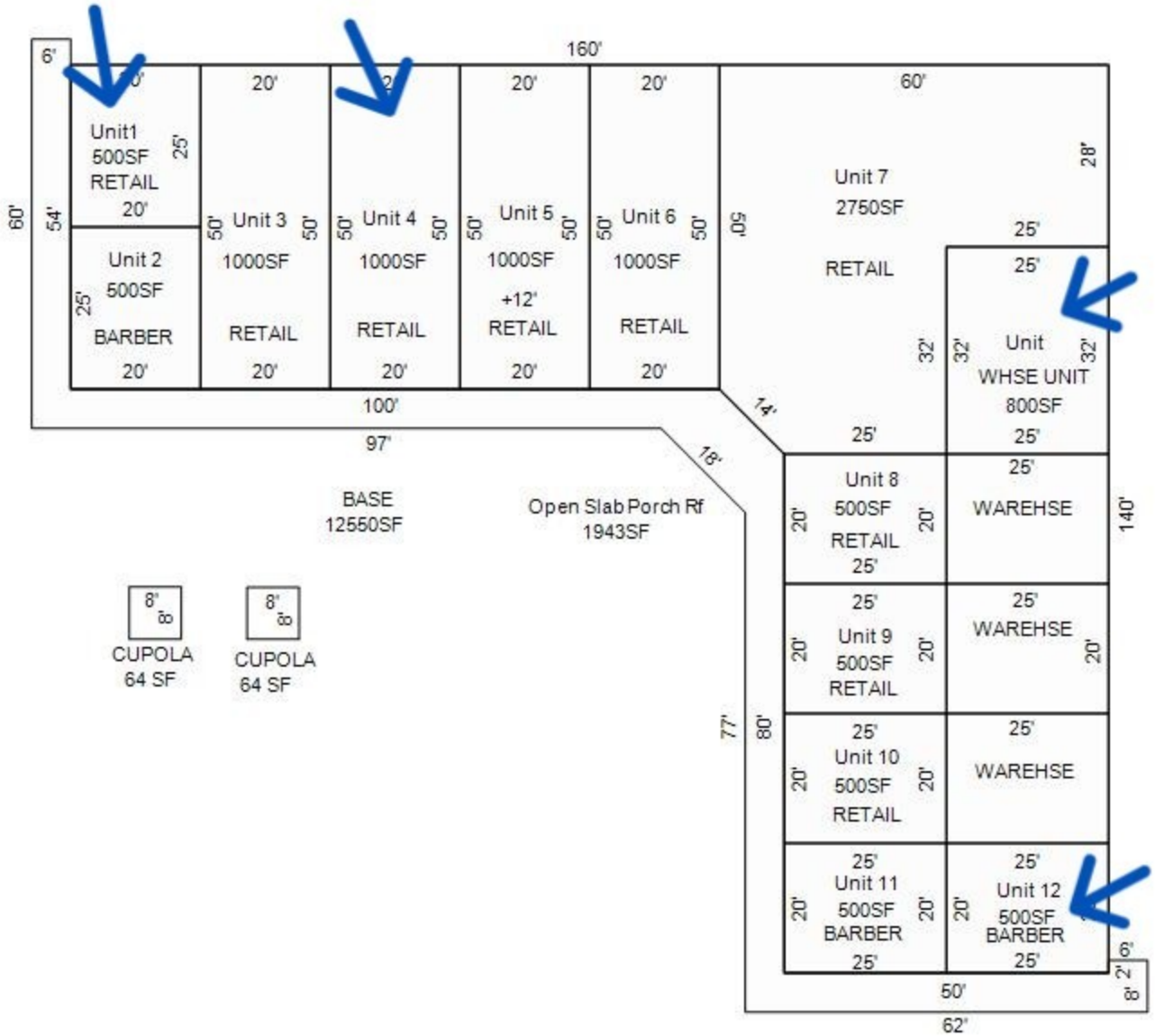
160'
6'
Unit1
500SF
RETAIL
20'
25'
Unit 2
500SF
BARBER
20'
25'
60'
54'
20'
Unit 3
1000SF
RETAIL
20'
50'
Unit 4
1000SF
RETAIL
20'
Unit 5
1000SF
+12'
RETAIL
20'
Unit 6
1000SF
RETAIL
20'
100'
97'
60'
Unit 7
2750SF
RETAIL
28'
25'
Unit
WHSE UNIT
800SF
32'
14'
18'
BASE
12550SF
Open Slab Porch Rf
1943SF
Unit 8
500SF
RETAIL
WAREHSE
140'
Unit 9
500SF
RETAIL
WAREHSE
Unit 10
500SF
RETAIL
WAREHSE
77'
80'
Unit 11
500SF
BARBER
Unit 12
500SF
BARBER
8'
CUPOLA
64 SF
8'
CUPOLA
64 SF
50'
62'
2'
8'